WSS12T-2/TXL
Actuator and Sensor Cable, PUR – Connection Cable

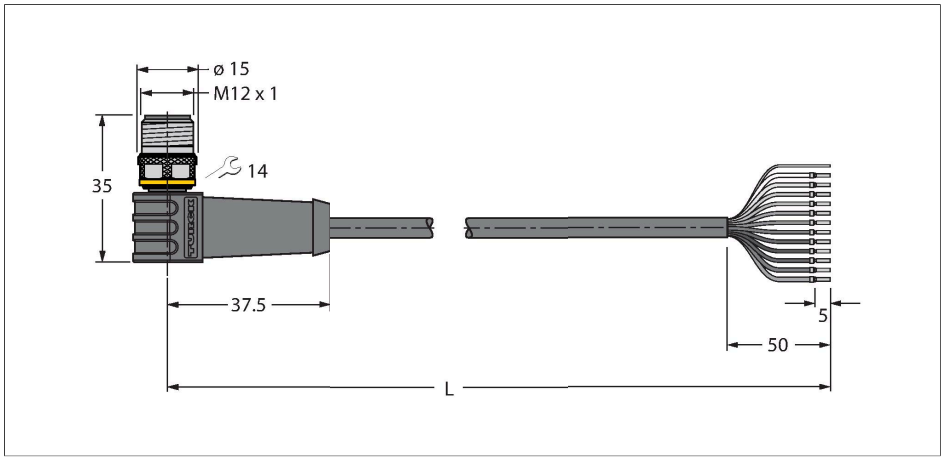

Technical data

Type	WSS12T-2/TXL
ID	6626926
Connector A	Male, M12 × 1, Angled, A-coded
Number of Pins	12
Contacts	Brass, CuZn, Gold-plated
Contact carriers	Plastic, TPU, Black
Connector body	Plastic, TPU, Black
Coupling nut/screw	Brass, CuZn, Nickel-plated
Mechanical lifespan	> 100 Mating cycles
Pollution degree	3
Protection class	IP67, IP69K, Only in screwed condition
Cable	
Cable diameter	Ø 6.4 mm ±0.20
Cable length	2 m
Cable jacket	PUR, Black
Shielding	Aluminum foil, tinned copper wire
Core insulation	PP
Core cross-section	12 x 0.14 mm²
Arrangement of strands	18 x 0.1 mm
Core colors	BN, WH, BU, BK, GY, PK, VT, OG, GY/PK, WH/BU, WH/GY, GY/BN
Electrical properties at +20 °C	
Rated voltage	30 V
Test voltage	2000 V
Current	1.5 A
Insulation resistance	> 30.5 MΩ/km
forward resistance	max. 138 Ω/km

Features

- Male M12, angled, 12-pin
- Shield on coupling nut/screw
- Jacket material: PUR, shielded
- Jacket color: black
- Suitable for drag chain use
- Resistant to chemicals, UV radiation and oils
- Flame retardant (FT2 acc. to UL 1581, IEC 60332-2-2)
- Resistant to welding sparks
- Free from halogen, silicone, PVC and LABS
- Particularly resistant to abrasion
- Protection class: IP67, IP69K
- Cable length: 2.0 m

Cable Cross-Section

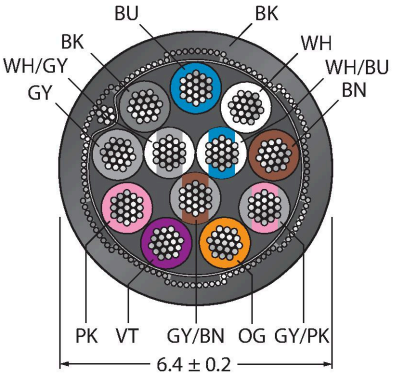

Contact assignment

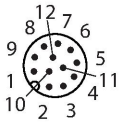

Functional principle

Drawing shows design status including hexagon coupling nut
(Production start CW11/2016).
Wiring diagram shows contact assignment acc. to DIN EN 60947-5-2
(Production start CW16/2017).

WSS12T-2/TXL | 01-03-2023 12-08 | Technical modifications reserved

Technical data

Mechanical and chemical properties	
Bending radius (stationary installation)	≥ 5 x Ø
Bending radius (flexible use)	≥ 10 x Ø
Bending cycles	≥ 5 million
Admissible acceleration	max. 5 m/s²
Admissible travel path, horizontal	5 m (at 5 m/s²)
Admissible travel path, vertical	2 m (at 5 m/s²)
Admissible traversing speed	3.3 m/s
Torsional stress	± 180 °/m
Ambient temperature range (stationary)	-50 °C…+80 °C
Ambient temperature range (In motion)	-25 °C…+80 °C
Ambient temperature during drag chain operation	-25 °C…+60 °C
Approvals	cULus

Circuit Diagram

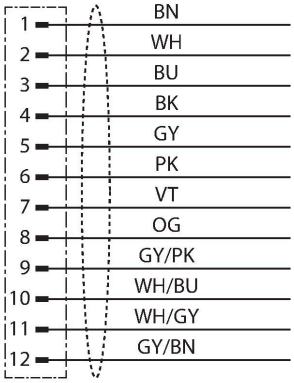

Stranded Wire Colors

Pin	DIN 47100 (old)	DIN EN 60947-5-2 (new)
1	BN	BN
2	BU	WH
3	WH	BU
4	GN	BK
5	PK	GY
6	YE	PK
7	BK	VT
8	GY	OG
9	RD	GY/PK
10	VT	WH/BU
11	GY/PK	WH/GY
12	RD/BU	GY/BN

Accessories

TORQUE-WRENCH-SET-AS 6936170



Torque wrench set; handles with adjustable torque 0.4-1.0 Nm, torque wrench for M8 (SW9), fork wrench for M12 (SW 14)

BLANK-LABEL-FOR-CORDSETS-TEL-TXL 6936206

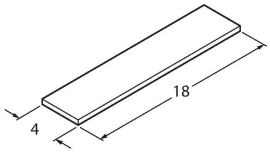

Label for TEL and TXL cables, length: 18 mm, height: 4 mm, material: polycarbonate (PC), color: white, halogen-free and flame-retardant

WSS12T-2/TXL | 01-03-2023 12-08 | Technical modifications reserved