WKC4.5T-2-RSC4.5T/TXO
Actuator and Sensor Cable, PUR – Extension Cable

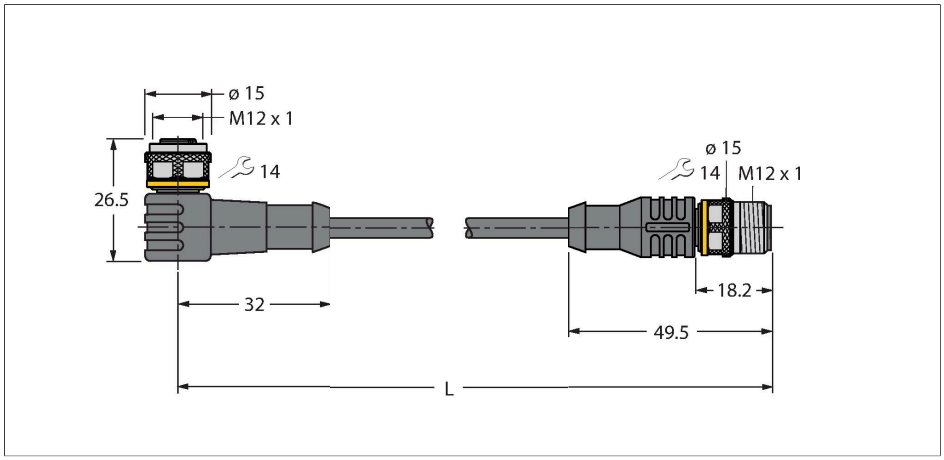

Technical data

Type	WKC4.5T-2-RSC4.5T/TXO
ID	6627284
Connector A	Female, M12 × 1, Angled, A-coded
Number of Pins	5
Contacts	Brass, CuZn, Gold-plated
Contact carriers	Plastic, TPU, Black
Connector body	Plastic, TPU, Black
Coupling nut/screw	Brass, CuZn, Nickel-plated
Seal	Plastic, FPM/FKM
Mechanical lifespan	> 100 Mating cycles
Pollution degree	3
Protection class	IP67, IP69K, Only in screwed condition
Connector B	Male, M12 × 1, Straight, A-coded
Number of pins	5
Contacts	Brass, CuZn, Gold-plated
Contact carriers	Plastic, TPU, Black
Connector body	Plastic, TPU, Black
Coupling nut/retaining screw	Brass, CuZn, Nickel-plated
Mechanical life	> 100 Mating cycles
Pollution degree	3
Protection class	IP67, IP69K, Only when screwed together
Cable	
Cable diameter	Ø 5.5 mm ±0.20
Cable length	2 m
Cable jacket	PUR, Orange
Core insulation	PP
Core cross-section	5 x 0.34 mm²

Features

- Female M12, angled, 5-pin
- Male M12, straight, 5-pin
- Jacket material: PUR
- Jacket color: orange
- Suitable for drag chain use
- Resistant to chemicals, UV radiation and oils
- Flame retardant (FT2 acc. to UL 1581, IEC 60332-2-2)
- Resistant to welding sparks
- Free from halogen, silicone, PVC and LABS
- Particularly resistant to abrasion
- Protection class: IP67, IP69K
- Cable length: 2.0 m

Cable Cross-Section

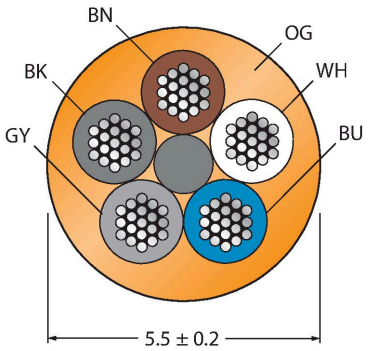

Contact assignment



Circuit Diagram



WKC4.5T-2-RSC4.5T/TXO| 01-03-2023 16-25 | Technical modifications reserved

Technical data

Arrangement of strands	42 x 0.1 mm
Core colors	BN, WH, BU, BK, GY
Electrical properties at +20 °C	
Rated voltage	60 V
Test voltage	2000 V
Current	4 A
Insulation resistance	> 30.5 MΩ/km
forward resistance	max. 57 Ω/km
Mechanical and chemical properties	
Bending radius (stationary installation)	≥ 5 x Ø
Bending radius (flexible use)	≥ 10 x Ø
Bending cycles	≥ 5 million
Admissible acceleration	max. 5 m/s²
Admissible travel path, horizontal	5 m (at 5 m/s²)
Admissible travel path, vertical	2 m (at 5 m/s²)
Admissible traversing speed	3.3 m/s
Torsional stress	± 180 °/m
Ambient temperature range (stationary)	-50 °C…+80 °C
Ambient temperature range (In motion)	-25 °C…+80 °C
Ambient temperature during drag chain operation	-25 °C…+60 °C
Approvals	cULus

Accessories

TORQUE-WRENCH-SET-AS 6936170



Torque wrench set; handles with adjustable torque 0.4-1.0 Nm, torque wrench for M8 (SW9), fork wrench for M12 (SW 14)

BLANK-LABEL-FOR-CORDSETS-TEL-TXL 6936206

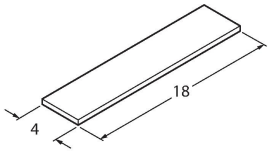

Label for TEL and TXL cables, length: 18 mm, height: 4 mm, material: polycarbonate (PC), color: white, halogen-free and flame-retardant

WKC4.5T-2-RSC4.5T/TXO| 01-03-2023 16-25 | Technical modifications reserved