Actuator and Sensor Cable, PUR Quick-Turn Extension Cable WKC4Q-5-RSC4Q/TXL

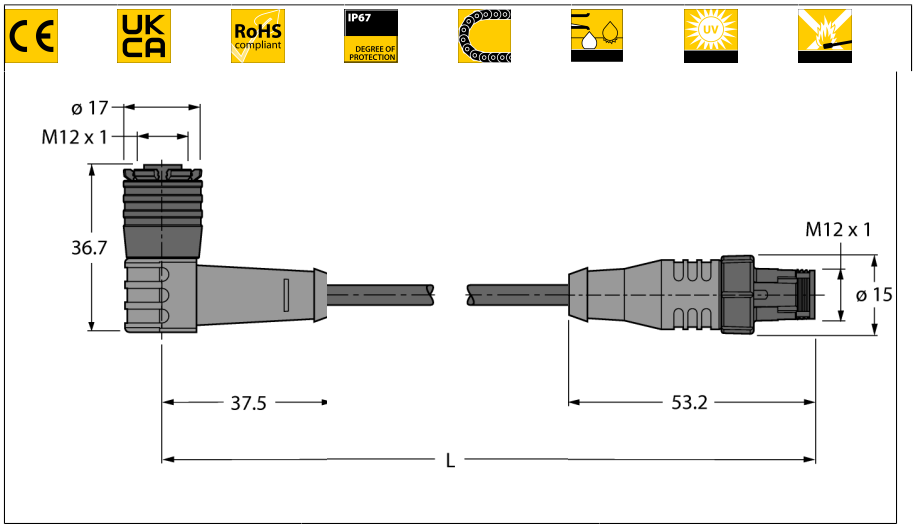

- Female M12, angled, 3-pin
- Male M12, straight, 3-pin
- Sheath material: PUR
- Sheath color: black
- Qualified for drag chain use
- Resistant to weld splatter
- Resistant to chemicals, UV radiation and oils
- Flame retardant
- Free from halogen, silicone, PVC and LABS
- Particularly resistant to abrasion
- RoHS conform
- Protection class IP67
- Cable length: 5.0 m

Type	WKC4Q-5-RSC4Q/TXL
ID	6628027
Connector A	Female, M12 × 1, Angled, A-coded
Number of Pins	3
Contact carriers	Plastic, TPU, Black
Connector body	Plastic, TPU, Yellow
Interlocking sleeve	Plastic, PBT, black
Mechanical lifespan	> 50 Mating cycles
Pollution degree	3
Protection class	IP67, (plugged)
Connector B	Male, M12 × 1, Straight, A-coded
Number of pins	3 pins
Contact carriers	Plastic, TPU, Black
Connector body	Plastic, TPU, Yellow
Interlocking sleeve	Plastic, PBT, black
Mechanical life	> 50 Mating cycles
Pollution degree	3
Protection class	IP67, (Plugged)
Cable	
Cable diameter	Ø 4.3mm ±0.20
Cable length	5 m m
Cable jacket	PUR, Black
Core insulation	PP
Core cross-section	3 x 0.34 mm²
Arrangement of strands	42 x 0.1mm
Core colors	BN, BU, BK

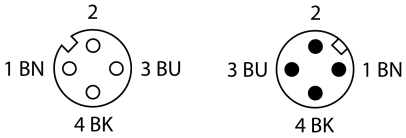

Circuit Diagram

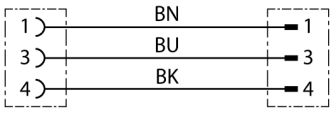

Edition • 2023-05-24T22:09:40+02:00

Electrical properties at +20 °C	
Rated voltage	250VV
Test voltage	2000 V
Current	4AA
Insulation resistance	> 30.5 MΩ/km
forward resistance	max. 57 Ω/km

Mechanical and chemical properties	
Bending radius (stationary installation)	≥ 5 x Ø
Bending radius (flexible use)	≥ 10 x Ø
Bending cycles	≥ 5 million
Admissible acceleration	max. 5 m/s²
Admissible travel path, horizontal	5 m (at 5 m/s²)
Admissible travel path, vertical	2 m (at 5 m/s²)
Admissible traversing speed	3.3 m/s
Torsional stress	±180°/m
Ambient temperature range (stationary)	-50°C…+80°C°C
Ambient temperature range (In motion)	-25°C…+80°C°C
Ambient temperature during drag chain operation	-25°C…+60°C°C

Edition • 2023-05-24T22:09:40+02:00

Accessories

Type code	Ident no.		Dimension drawing
BLANK-LABEL-FOR-CORDSETS-TEL-TXL	6936206	Label for TEL and TXL cables, length: 18 mm, height: 4 mm, material: polycarbonate (PC), color: white, halogen-free and flame-retardant	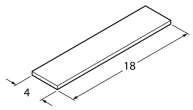

Edition • 2023-05-24T22:09:40+02:00