WKC4.4T-P7X3.1-3-RSC4.4T/TXL1001
Weld-Splatter Resistant Actuator and Sensor Cable – Extension Cable

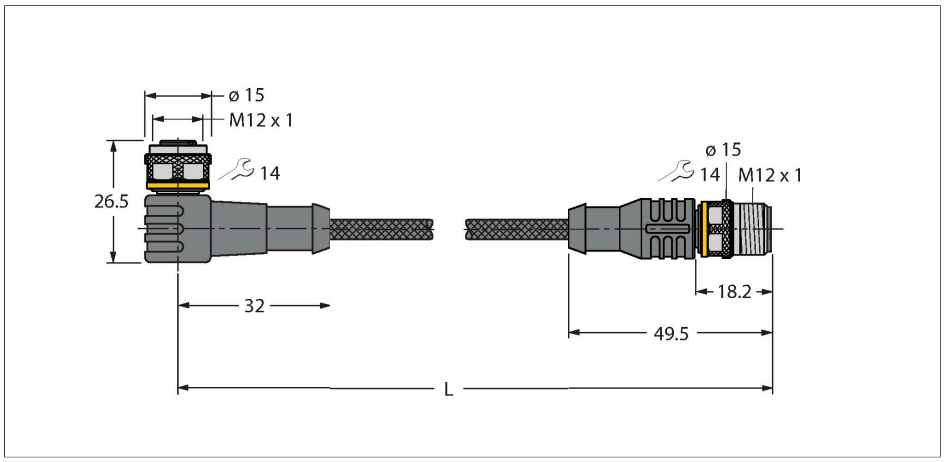

Technical data

Type	WKC4.4T-P7X3.1-3-RSC4.4T/TXL1001
ID	6628095
Connector A	Female, M12 × 1, Angled, A-coded
Number of Pins	4
Contacts	Brass, CuZn, Gold-plated
Contact carriers	Plastic, TPU, Black
Connector body	Plastic, TPU, Translucent
Coupling nut/screw	Brass, CuZn, Nickel-plated
Seal	Plastic, FPM/FKM
Display operating voltage	LED, Green
Display switch state	LED, Yellow/Red
Mechanical lifespan	> 100 Mating cycles
Pollution degree	3
Protection class	IP67, IP69K, Only in screwed condition
Connector B	Male, M12 × 1, Straight, A-coded
Number of pins	4
Contacts	Brass, CuZn, Gold-plated
Contact carriers	Plastic, TPU, Black
Connector body	Plastic, TPU, Black
Coupling nut/retaining screw	Brass, CuZn, Nickel-plated
Mechanical life	> 100 Mating cycles
Pollution degree	3
Protection class	IP67, IP69K, Only when screwed together
Cable	
Cable diameter	Ø 5.3 mm ±0.20

Features

- Female M12, angled, 4-pin
- With 3-color LED (PNP, red, yellow, green)
- Male M12, straight, 4-pin
- Jacket material: PUR jacketed with aramid fibers
- Jacket color: yellow
- Resistant to welding sparks
- Flame retardant
- Resistant to chemicals, UV radiation and oils
- Free from halogen, silicone, PVC and LABS
- Protection class: IP67, IP69K
- Protective jacket material: aramid fibers
  - Tensile strength: 2923 MPa
  - Breaking strength: 333 N
  - Elongation at break: 3.6 %
  - Temperature peaks: up to +200 °C
- Cable length: 3 m

Cable Cross-Section

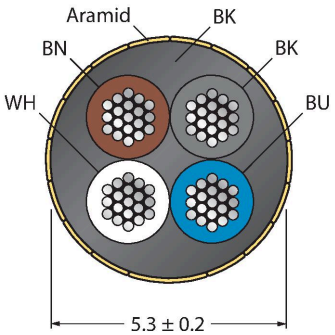

Contact assignment



WKC4.4T-P7X3.1-3-RSC4.4T/TXL1001| 01-03-2023 16-14 | Technical modifications reserved

Technical data

Cable length	3 m
Cable jacket	PUR, Yellow
Core insulation	PP
Core cross-section	4 x 0.34 mm²
Arrangement of strands	42 x 0.1 mm
Core colors	BN, WH, BU, BK
Electrical properties at +20 °C	
Rated voltage	30 V_{DC}
Test voltage	2000 V
Current	4 A
Insulation resistance	> 30.5 MΩ/km
forward resistance	max. 57 Ω/km
Mechanical and chemical properties	
Bending radius (stationary installation)	≥ 5 x Ø
Bending radius (flexible use)	≥ 10 x Ø
Ambient temperature range (stationary)	-50 °C…+105 °C
Ambient temperature range (In motion)	-30 °C…+90 °C

Circuit Diagram

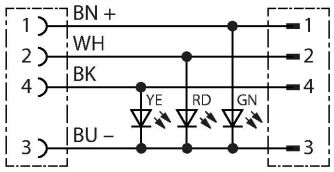

Accessories

TORQUE-WRENCH-SET-AS	6936170



Torque wrench set; handles with adjustable torque 0.4-1.0 Nm, torque wrench for M8 (SW9), fork wrench for M12 (SW 14)

WKC4.4T-P7X3.1-3-RSC4.4T/TXL1001| 01-03-2023 16-14 | Technical modifications reserved