VBRS4.4-2WKC4.324T-7/7/TXL
2-Way Splitter – Y-Splitter with Cable, Male Connector M12 × 1 - 2 × Female Connectors M12 × 1

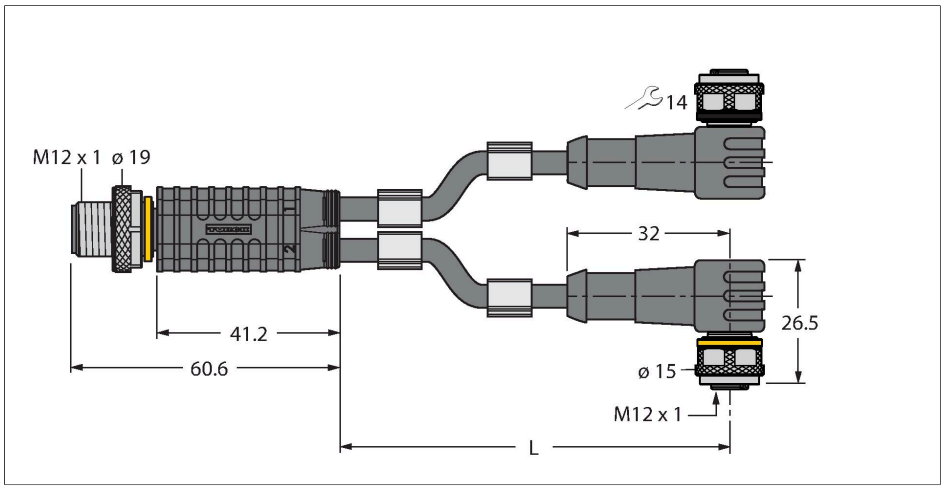

Technical data

Type	VBRS4.4-2WKC4.324T-7/7/TXL
ID	6628102
Distributed I/O	Junction Boxes, 2 -port
Connector A	Male, M12 × 1, Straight
Number of Pins	4
Contacts	Metal, CuZn, Gold-plated
Contact carriers	Plastic, TPU, Black
Connector body	Plastic, TPU, Black
Coupling nut/screw	Brass, CuZn, Nickel-plated
Tightening torque (range)	0.8 … 1 Nm (observe max. torque of mating connec-tor!)
Mechanical lifespan	> 100 Mating cycles
Pollution degree	3
Protection class	IP67, Only in screwed condition
Connector B	2 x Female, M12 × 1, Angled
Number of pins	4
Contacts	Metal, CuZn, Gold-plated
Contact carriers	Plastic, TPU, Black
Connector body	Plastic, TPU, Black
Coupling nut/retaining screw	Brass, CuZn, Nickel-plated
Seal	Plastic, FPM/FKM
Tightening torque	0.8 … 1 Nm (observe max. torque of mating connec-tor!)
Mechanical life	> 100 Mating cycles
Pollution degree	3

Features

- Jacket material: PUR
- Jacket color: black
- Suitable for drag chain use
- Resistant to chemicals, UV radiation and oils
- Flame-retardant (FT2 in accordance with UL 1581, IEC 60332-2-2)
- Free from halogen, silicone, PVC and LABS
- Particularly resistant to abrasion
- RoHS-compliant
- Protection class: IP67
- 4/4-pin
- Cable length: 7.0/7.0 meter

Contact assignment



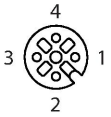

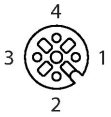

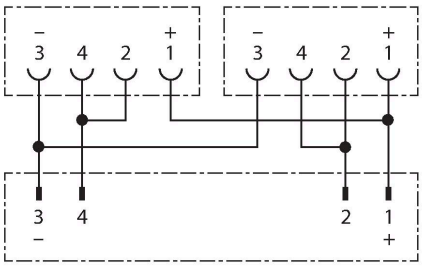

VBRS4.4-2WKC4.324T-7/7/TXL| 01-03-2023 18-12 | Technical modifications reserved

Technical data

Protection class	IP67, Only when screwed together
Cable diameter	Ø 4.3 mm ±0.20
Cable length	7 m, 7 m
Cable jacket	PUR, Black
Core insulation	PP
Core cross-section	3 x 0.34 mm²
Arrangement of strands	42 x 0.1 mm
Core colors	BN, BU, BK
Electrical properties at +20 °C	
Rated voltage	250 V
Test voltage	2000 V
Current	4 A
Insulation resistance	> 30.5 MΩ/km
forward resistance	max. 57.5 Ω/km
Mechanical and chemical properties	
Max. tensile strength (static)	≤ 50 N/mm²
Max. tensile strength (dynamic)	≤ 20 N/mm²
Bending radius (stationary installation)	≥ 5 x Ø
Bending radius (flexible use)	≥ 10 x Ø
Bending cycles	≥ 5 million
Admissible acceleration	max. 5 m/s²
Admissible travel path, horizontal	5 m (at 5 m/s²)
Admissible traversing speed	3.3 m/s
Torsional stress	± 180 °/m
Ambient temperature range (stationary)	-50 °C…+80 °C
Ambient temperature range (In motion)	-25 °C…+80 °C
Ambient temperature during drag chain operation	-25 °C…+60 °C
Approvals	CE UKCA

Accessories

TORQUE-WRENCH-SET-AS 6936170



Torque wrench set; handles with adjustable torque 0.4-1.0 Nm, torque wrench for M8 (SW9), fork wrench for M12 (SW 14)

BLANK-LABEL-FOR-CORDSETS-TEL-TXL 6936206

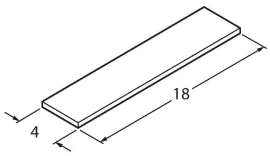

Label for TEL and TXL cables, length: 18 mm, height: 4 mm, material: polycarbonate (PC), color: white, halogen-free and flame-retardant

VBRS4.4-2WKC4.324T-7/7/TXL| 01-03-2023 18-12 | Technical modifications reserved